SIEMENS

Submittal Sheet
Document No. 154-038
February 4, 2016

599 Series 2-Way Ball Valves

Description

The 599 Series 2-Way Ball Valves are coupled with OpenAir™ actuators to provide equal percentage flow control. The Ball Valves are 1/4-turn rotary control valves.

Product Numbers

Use the product numbers in Table 1 through Table 11 to order a valve and actuator assembly. The product number consists of a 4-character actuator prefix code, a hyphen, and a 5-digit valve body suffix code. Stainless steel product numbers have an “S” suffix in Table 6 through Table 11.

Features

- 200 psi close-off with ANSI Class IV leakage for all line sizes and actuators.
- Available with chrome-plated brass ball and brass stem or stainless steel ball and stem.
- Blow-out proof stem withstands high pressure.
- Universal mounting plate.
- Actuator and plate can be rotated (90 degree increments).
- Standoffs provide a thermal barrier between the actuator and the mounting plate.
- Operating handle for manual operation.

Table 1. Fail-In-Place Assemblies: Chrome-Plated Ball with Brass Stem (1/2-Inch and 3/4-Inch)

Valve Body Product Number *	Valve Size Inches (mm)	Flow Rate Cv (Kvs)	Close-Off ΔP in psi (kPa)	Fail-in-Place			
				Floating		0 to 10 Vdc	
				GDE 131.1P	GDE 131.1Q	GDE 161.1P	GDE 161.1Q
				3 foot (.9m) Wires	Conduit Adapter & 6-foot (1.8m) Wires	3 foot (.9m) Wires	Conduit Adapter & 6-foot (1.8m) Wires
				Actuator Prefix Code			
				171A	173A	171C	173C
599-10300	1/2 (15)	0.4 (0.34)	200 (1379)	171A-10300	173A-10300	171C-10300	173C-10300
599-10301		0.63 (0.54)		171A-10301	173A-10301	171C-10301	173C-10301
599-10302		1.0 (0.9)		171A-10302	173A-10302	171C-10302	173C-10302
599-10303		1.6 (1.4)		171A-10303	173A-10303	171C-10303	173C-10303
599-10304		2.5 (2.2)		171A-10304	173A-10304	171C-10304	173C-10304
599-10305		4.0 (3.4)		171A-10305	173A-10305	171C-10305	173C-10305
599-10306		6.3 (5.4)		171A-10306	173A-10306	171C-10306	173C-10306
599-10307*		10 (8.6)		171A-10307*	173A-10307*	171C-10307*	173C-10307*
599-10308	3/4 (20)	6.3 (5.4)		171A-10308	173A-10308	171C-10308	173C-10308
599-10309		10 (8.6)		171A-10309	173A-10309	171C-10309	173C-10309
599-10310		16 (14)		171A-10310	173A-10310	171C-10310	173C-10310
599-10311*		25 (22)		171A-10311*	173A-10311*	171C-10311*	173C-10311*

*Denotes a full-port valve without flow characterizers insert.

Table 2. Fail-In-Place Assemblies: Chrome-Plated Ball with Brass Stem (1-Inch to 2-Inch)

Valve Body Product Number *	Valve Size Inches (mm)	Flow Rate Cv (Kvs)	Close-Off ΔP in psi (kPa)	Fail-in-Place							
				Floating				0 to 10 Vdc			
				GDE 131.1P	GLB 131.1P	GDE 131.1Q	GLB 131.1Q	GDE 161.1P	GLB 161.1P	GDE 161.1Q	GLB 161.1Q
				3 foot (.9m) Wires		Conduit Adapter & 6-foot (1.8m) Wires		3 foot (.9m) Wires		Conduit Adapter & 6-foot (1.8m) Wires	
				Actuator Prefix Code							
				171A	171B	173A	173B	171C	171D	173C	173D
599-10312	1 (25)	10 (9.0)	200 (1379)	171A-10312		173A-10312		171C-10312		173C-10312	
599-10313		16 (14)		171A-10313		173A-10313		171C-10313		173C-10313	
599-10314		25 (22)		171A-10314		173A-10314		171C-10314		173C-10314	
599-10315		40 (34)		171A-10315		173A-10315		171C-10315		173C-10315	
599-10316*		63 (54)		171A-10316*		173A-10316*		171C-10316*		173C-10316*	
599-10317	1 1/4 (32)	16 (14)		171A-10317		173A-10317		171C-10317		173C-10317	
599-10318		25 (22)		171A-10318		173A-10318		171C-10318		173C-10318	
599-10319		40 (34)		171A-10319		173A-10319		171C-10319		173C-10319	
599-10320		63 (54)		171A-10320		173A-10320		171C-10320		173C-10320	
599-10321*		100 (90)		171A-10321*		173A-10321*		171C-10321*		173C-10321*	
599-10322	1 1/2 (40)	25 (22)		171B-10322		173B-10322		171D-10322		173D-10322	
599-10323		40 (34)		171B-10323		173B-10323		171D-10323		173D-10323	
599-10324*		63 (54)		171B-10324*		173B-10324*		171D-10324*		173D-10324*	
599-10325		100 (90)		171B-10325		173B-10325		171D-10325		173D-10325	
599-10326*		160 (140)		171B-10326*		173B-10326*		171D-10326*		173D-10326*	
599-10327	2 (50)	40 (34)		171B-10327		173B-10327		171D-10327		173D-10327	
599-10328		63 (54)		171B-10328		173B-10328		171D-10328		173D-10328	
599-10329*		100 (90)		171B-10329*		173B-10329*		171D-10329*		173D-10329*	
599-10330*		160 (140)		171B-10330*		173B-10330*		171D-10330*		173D-10330*	

***Denotes a full-port valve without flow characterizers insert.**

Table 3. Fail-Safe Assemblies: Chrome-Plated Ball with Brass Stem (1/2-Inch and 3/4-Inch).

Valve Body Product Number*	Valve Size Inches (mm)	Flow Rate Cv (Kvs)	Close-off ΔP in psi (kPa)	Fail-Safe					
				2-Position		Floating		2 to 10 Vdc	
				GQD121.1P		GQD131.1P		GQD151.1P	
				N.O.	N.C.	N.O.	N.C.	N.O.	N.C.
				Actuator Prefix Code					
				171H	172H	171J	172J	171K	172K
599-10300	1/2 (15)	0.4 (0.34)	200 (1379)	171H-10300	172H-10300	171J-10300	172J-10300	171K-10300	172K-10300
599-10301		0.63 (0.54)		171H-10301	172H-10301	171J-10301	172J-10301	171K-10301	172K-10301
599-10302		1.0 (0.9)		171H-10302	172H-10302	171J-10302	172J-10302	171K-10302	172K-10302
599-10303		1.6 (1.4)		171H-10303	172H-10303	171J-10303	172J-10303	171K-10303	172K-10303
599-10304		2.5 (2.2)		171H-10304	172H-10304	171J-10304	172J-10304	171K-10304	172K-10304
599-10305		4.0 (3.4)		171H-10305	172H-10305	171J-10305	172J-10305	171K-10305	172K-10305
599-10306		6.3 (5.4)		171H-10306	172H-10306	171J-10306	172J-10306	171K-10306	172K-10306
599-10307*		10 (8.6)		171H-10307*	172H-10307*	171J-10307*	172J-10307*	171K-10307*	172K-10307*
599-10308	3/4 (20)	6.3 (5.4)		171H-10308	172H-10308	171J-10308	172J-10308	171K-10308	172K-10308
599-10309		10 (8.6)		171H-10309	172H-10309	171J-10309	172J-10309	171K-10309	172K-10309
599-10310		16 (14)		171H-10310	172H-10310	171J-10310	172J-10310	171K-10310	172K-10310
599-10311*		25 (22)		171H-10311*	172H-10311*	171J-10311*	172J-10311*	171K-10311*	172K-10311*

*Denotes a full-port valve without flow characterizer insert.

Table 4. Fail-Safe Assemblies: Chrome-Plated Ball and Brass Stem (1-Inch to 2-Inch).

Valve Body Product Number *	Valve Size Inches (mm)	Flow Rate Cv (Kvs)	Close-ff ΔP in psi (kPa)	Fail-Safe					
				2-Position		Floating		0 to 10 Vdc	
				GMA121.1P		GMA131.1P		GMA161.1P	
				N.O.	N.C.	N.O.	N.C.	N.O.	N.C.
				Actuator Prefix Code					
				171E	172E	171F	172F	171G	172G
599-10312	1 (25)	10 (9.0)	200 (1379)	171E-10312	172E-10312	171F-10312	172F-10312	171G-10312	172G-10312
599-10313		16 (14)		171E-10313	172E-10313	171F-10313	172F-10313	171G-10313	172G-10313
599-10314		25 (22)		171E-10314	172E-10314	171F-10314	172F-10314	171G-10314	172G-10314
599-10315		40 (34)		171E-10315	172E-10315	171F-10315	172F-10315	171G-10315	172G-10315
599-10316*		63 (54)		171E-10316*	172E-10316*	171F-10316*	172F-10316*	171G-10316*	172G-10316*
599-10317	1 1/4 (32)	16 (14)		171E-10317	172E-10317	171F-10317	172F-10317	171G-10317	172G-10317
599-10318		25 (22)		171E-10318	172E-10318	171F-10318	172F-10318	171G-10318	172G-10318
599-10319		40 (34)		171E-10319	172E-10319	171F-10319	172F-10319	171G-10319	172G-10319
599-10320		63 (54)		171E-10320	172E-10320	171F-10320	172F-10320	171G-10320	172G-10320
599-10321*		100 (90)		171E-10321*	172E-10321*	171F-10321*	172F-10321*	171G-10321*	172G-10321*
599-10322	1 1/2 (40)	25 (22)		171E-10322	172E-10322	171F-10322	172F-10322	171G-10322	172G-10322
599-10323		40 (34)		171E-10323	172E-10323	171F-10323	172F-10323	171G-10323	172G-10323
599-10324*		63 (54)		171E-10324*	172E-10324*	171F-10324*	172F-10324*	171G-10324*	172G-10324*
599-10325		100 (90)		171E-10325	172E-10325	171F-10325	172F-10325	171G-10325	172G-10325
599-10326*		160 (140)		171E-10326*	172E-10326*	171F-10326*	172F-10326*	171G-10326*	172G-10326*
599-10327	2 (50)	40 (34)		171E-10327	172E-10327	171F-10327	172F-10327	171G-10327	172G-10327
599-10328		63 (54)		171E-10328	172E-10328	171F-10328	172F-10328	171G-10328	172G-10328
599-10329*		100 (90)		171E-10329*	172E-10329*	171F-10329*	172F-10329*	171G-10329*	172G-10329*
599-10330*		160 (140)		171E-10330*	172E-10330*	171F-10330*	172F-10330*	171G-10330*	172G-10330*

* Denotes a full-port valve without flow characterizer insert.

Table 5. Fail-Safe Assemblies: Full-Port, Chrome-Plated Ball and Brass Stem, 120V.

Valve Body Product Number*	Valve Size Inches (mm)	Flow Rate Cv (Kvs)	Close-off ΔP in psi (kPa)	Fail-Safe, 120V			
				2-Position			
				GQD221.1U		GMA221.1U	
				N.O.	N.C.	N.O.	N.C.
				Actuator Prefix Code			
				171L	172L	171M	172M
599-10307*	1/2 (15)	10 (9)	200 (1379)	171L-10307*	172L-10307*	—	—
599-10311*	3/4 (20)	25 (22)		171L-10311*	172L-10311*	—	—
599-10316*	1 (25)	63 (54)		—	—	171M-10316*	172M-10316*
599-10321*	1-/14 (32)	100 (90)		—	—	171M-10321*	172M-10321*
599-10326*	1-1/2 (40)	160 (140)		—	—	171M-10326*	172M-10326*
599-10330*	2 (50)			—	—	171M-10330*	172M-10330*

* Denotes a full-port valve without flow characterizers insert.

Table 6. Fail-In-Place Assemblies: Stainless Steel Ball and Stem (1/2-Inch and 3/4-Inch).

Valve Body Product Number *	Valve Size Inches (mm)	Flow Rate Cv (Kvs)	Close-Off ΔP in psi (kPa)	Fail-in-Place			
				Floating		0 to 10 Vdc	
				GDE 131.1P	GDE 131.1Q	GDE 161.1P	GDE 161.1Q
				3 foot (.9m) Wires	Conduit Adapter & 6-foot (1.8m) Wires	3 foot (.9m) Wires	Conduit Adapter & 6-foot (1.8m) Wires
				Actuator Prefix Code			
				171A	173A	171C	173C
599-10300S	1/2 (15)	0.4 (0.34)	200 (1379)	171A-10300S	173A-10300S	171C-10300S	173C-10300S
599-10301S		0.63 (0.54)		171A-10301S	173A-10301S	171C-10301S	173C-10301S
599-10302S		1.0 (0.9)		171A-10302S	173A-10302S	171C-10302S	173C-10302S
599-10303S		1.6 (1.4)		171A-10303S	173A-10303S	171C-10303S	173C-10303S
599-10304S		2.5 (2.2)		171A-10304S	173A-10304S	171C-10304S	173C-10304S
599-10305S		4.0 (3.4)		171A-10305S	173A-10305S	171C-10305S	173C-10305S
599-10306S		6.3 (5.4)		171A-10306S	173A-10306S	171C-10306S	173C-10306S
599-10307S*		10 (8.6)		171A-10307S*	173A-10307S*	171C-10307S*	173C-10307S*
599-10308S	3/4 (20)	6.3 (5.4)		171A-10308S	173A-10308S	171C-10308S	173C-10308S
599-10309S		10 (8.6)		171A-10309S	173A-10309S	171C-10309S	173C-10309S
599-10310S		16 (14)		171A-10310S	173A-10310S	171C-10310S	173C-10310S
599-10311S*		25 (22)		171A-10311S*	173A-10311S*	171C-10311S*	173C-10311S*

*Denotes a full-port valve without flow characterizer insert.

Table 7. Fail-In-Place Assemblies: Stainless Steel Ball and Stem (1-Inch to 2-Inch).

Valve Body Product Number *	Valve Size Inches (mm)	Flow Rate Cv (Kvs)	Close-Off ΔP in psi (kPa)	Fail-in-Place							
				Floating				0 to 10 Vdc			
				GDE 131.1P	GLB 131.1P	GDE 131.1Q	GLB 131.1Q	GDE 161.1P	GLB 161.1P	GDE 161.1Q	GLB 161.1Q
				3 foot (.9m) Wires		Conduit Adapter & 6-foot (1.8m) Wires		3 foot (.9m) Wires		Conduit Adapter & 6-foot (1.8m) Wires	
				Actuator Prefix Code							
				171A	171B	173A	173B	171C	171D	173C	173D
599-10312S	1 (25)	10 (9.0)	200 (1379)	171A-10312S		173A-10312S		171C-10312S		173C-10312S	
599-10313S		16 (14)		171A-10313S		173A-10313S		171C-10313S		173C-10313S	
599-10314S		25 (22)		171A-10314S		173A-10314S		171C-10314S		173C-10314S	
599-10315S		40 (34)		171A-10315S		173A-10315S		171C-10315S		173C-10315S	
599-10316S*		63 (54)		171A-10316S*		173A-10316S*		171C-10316S*		173C-10316S*	
599-10317S	1-1/4 (32)	16 (14)		171A-10317S		173A-10317S		171C-10317S		173C-10317S	
599-10318S		25 (22)		171A-10318S		173A-10318S		171C-10318S		173C-10318S	
599-10319S		40 (34)		171A-10319S		173A-10319S		171C-10319S		173C-10319S	
599-10320S		63 (54)		171A-10320S		173A-10320S		171C-10320S		173C-10320S	
599-10321S*		100 (90)		171A-10321S*		173A-10321S*		171C-10321S*		173C-10321S*	
599-10322S	1-1/2 (40)	25 (22)		171B-10322S		173B-10322S		171D-10322S		173D-10322S	
599-10323S		40 (34)		171B-10323S		173B-10323S		171D-10323S		173D-10323S	
599-10324S*		63 (54)		171B-10324S*		173B-10324S*		171D-10324S*		173D-10324S*	
599-10325S		100 (90)		171B-10325S		173B-10325S		171D-10325S		173D-10325S	
599-10326S*		160 (140)		171B-10326S*		173B-10326S*		171D-10326S*		173D-10326S*	
599-10327S	2 (50)	40 (34)		171B-10327S		173B-10327S		171D-10327S		173D-10327S	
599-10328S		63 (54)		171B-10328S		173B-10328S		171D-10328S		173D-10328S	
599-10329S*		100 (90)		171B-10329S*		173B-10329S*		171D-10329S*		173D-10329S*	
599-10330S*		160 (140)		171B-10330S*		173B-10330S*		171D-10330S*		173D-10330S*	

*Denotes a full-port valve without flow characterizer insert.

Table 8. Fail-Safe Assemblies: Stainless Steel Ball and Stem (1/2-Inch and 3/4-Inch).

Valve Body Product Number*	Valve Size Inches (mm)	Flow Rate Cv (Kvs)	Close-off ΔP in psi (kPa)	Fail-Safe					
				2-Position		Floating		2 to 10 Vdc	
				GQD121.1P		GQD131.1P		GQD151.1P	
				N.O.	N.C.	N.O.	N.C.	N.O.	N.C.
				Actuator Prefix Code					
				171H	172H	171J	172J	171K	172K
599-10300S	1/2 (15)	0.4 (0.34)	200 (1379)	171H-10300S	172H-10300S	171J-10300S	172J-10300S	171K-10300S	172K-10300S
599-10301S		0.63 (0.54)		171H-10301S	172H-10301S	171J-10301S	172J-10301S	171K-10301S	172K-10301S
599-10302S		1.0 (0.9)		171H-10302S	172H-10302S	171J-10302S	172J-10302S	171K-10302S	172K-10302S
599-10303S		1.6 (1.4)		171H-10303S	172H-10303S	171J-10303S	172J-10303S	171K-10303S	172K-10303S
599-10304S		2.5 (2.2)		171H-10304S	172H-10304S	171J-10304S	172J-10304S	171K-10304S	172K-10304S
599-10305S		4.0 (3.4)		171H-10305S	172H-10305S	171J-10305S	172J-10305S	171K-10305S	172K-10305S
599-10306S		6.3 (5.4)		171H-10306S	172H-10306S	171J-10306S	172J-10306S	171K-10306S	172K-10306S
599-10307S*		10 (8.6)		171H-10307S*	172H-10307S*	171J-10307S*	172J-10307S*	171K-10307S*	172K-10307S*
599-10308S	3/4 (20)	6.3 (5.4)		171H-10308S	172H-10308S	171J-10308S	172J-10308S	171K-10308S	172K-10308S
599-10309S		10 (8.6)		171H-10309S	172H-10309S	171J-10309S	172J-10309S	171K-10309S	172K-10309S
599-10310S		16 (14)		171H-10310S	172H-10310S	171J-10310S	172J-10310S	171K-10310S	172K-10310S
599-10311S*		25 (22)		171H-10311S*	172H-10311S*	171J-10311S*	172J-10311S*	171K-10311S*	172K-10311S*

*Denotes a full-port valve without flow characterizer insert.

Table 9. Fail-Safe Assemblies: Stainless Steel Ball and Stem (1-Inch to 2-Inch).

Valve Body Product Number *	Valve Size Inches (mm)	Flow Rate Cv (Kvs)	Close-off ΔPin psi (kPa)	Fail-Safe					
				2-Position		Floating		0 to 10 Vdc	
				GMA121.1P		GMA131.1P		GMA161.1P	
				N.O.	N.C.	N.O.	N.C.	N.O.	N.C.
				Actuator Prefix Code					
				171E	172E	171F	172F	171G	172G
599-10312S	1 (25)	10 (9.0)	200 (1379)	171E-10312S	172E-10312S	171F-10312S	172F-10312S	171G-10312S	172G-10312S
599-10313S		16 (14)		171E-10313S	172E-10313S	171F-10313S	172F-10313S	171G-10313S	172G-10313S
599-10314S		25 (22)		171E-10314S	172E-10314S	171F-10314S	172F-10314S	171G--0314S	172G-10314S
599-10315S		40 (34)		171E-10315S	172E-10315S	171F-10315S	172F-10315S	171G-10315S	172G-10315S
599-10316S*		63 (54)		171E-10316S*	172E-10316S*	171F-10316S*	172F-10316S*	171G-10316S*	172G-10316S*
599-10317S	1-1/4 (32)	16 (14)		171E-10317S	172E-10317S	171F-10317S	172F-10317S	171G-10317S	172G-10317S
599-10318S		25 (22)		171E-10318S	172E-10318S	171F-10318S	172F-10318S	171G-10318S	172G-10318S
599-10319S		40 (34)		171E-10319S	172E-10319S	171F-10319S	172F-10319S	171G-10319S	172G-10319S
599-10320S		63 (54)		171E-10320S	172E-10320S	171F-10320S	172F-10320S	171G-10320S	172G-10320S
599-10321S*		100 (90)		171E-10321S*	172E-10321S*	171F-10321S*	172F-10321S*	171G-10321S*	172G-10321S*
599-10322S	1-1/2 (40)	25 (22)		171E-10322S	172E-10322S	171F-10322S	172F-10322S	171G-10322S	172G-10322S
599-10323S		40 (34)		171E-10323S	172E-10323S	171F-10323S	172F-10323S	171G-10323S	172G-10323S
599-10324S*		63 (54)		171E-10324S*	172E-10324S*	171F-10324S*	172F-10324S*	171G-10324S*	172G-10324S*
599-10325S		100 (90)		171E-10325S	172E-10325S	171F-10325S	172F-10325S	171G-10325S	172G-10325S
599-10326S*		160 (140)		171E-10326S*	172E-10326S*	171F-10326S*	172F-10326S*	171G-10326S*	172G-10326S*
599-10327S	2 (50)	40 (34)		171E-10327S	172E-10327S	171F-10327S	172F-10327S	171G-10327S	172G-10327S
599-10328S		63 (54)		171E-10328S	172E-10328S	171F-10328S	172F-10328S	171G-10328S	172G-10328S
599-10329S*		100 (90)		171E-10329S*	172E-10329S*	171F-10329S*	172F-10329S*	171G-10329S*	172G-10329S*
599-10330S*		160 (140)		171E-10330S*	172E-10330S*	171F-10330S*	172F-10330S*	171G-10330S*	172G-10330S*

* Denotes a full-port valve without flow characterizer insert.

Table 10. Fail-Safe Assemblies: Full-Port, Stainless Steel Ball and Stem, 120V.

Valve Body Product Number*	Valve Size Inches (mm)	Flow Rate Cv (Kvs)	Close-off ΔP in psi (kPa)	Fail-Safe, 120V			
				2-Position			
				GQD221.1U		GMA221.1U	
				N.O.	N.C.	N.O.	N.C.
				Actuator Prefix Code			
				171L	172L	171M	172M
599-10307S*	1/2 (15)	10 (9)	200 (1379)	171L-10307S*	172L-10307S*	—	—
599-10311S*	3/4 (20)	25 (22)		171L-10311S*	172L-10311S*	—	—
599-10316S*	1 (25)	63 (54)		—	—	171M-10316S*	172M-10316S*
599-10321S*	1-/14 (32)	100 (90)		—	—	171M-10321S*	172M-10321S*
599-10326S*	1-1/2 (40)	160 (140)		—	—	171M-10326S*	172M-10326S*
599-10330S*	2 (50)			—	—	171M-10330S*	172M-10330S*

* Denotes a full-port valve without flow characterizer insert.

Table 11. Fail-Safe Assemblies: Full-Port, Stainless Steel Ball and Stem, 24V with Dual Auxiliary Switches.

Valve Body Product Number*	Valve Size Inches (mm)	Flow Rate Cv (Kvs)	Close-off ΔP in psi (kPa)	Fail-Safe, 24V			
				2-Position			
				GQD126.1P		GMA126.1P	
				N.O.	N.C.	N.O.	N.C.
				Actuator Prefix Code			
				171N	172N	171P	172P
599-10307S*	1/2 (15)	10 (9)	200 (1379)	171N-10307S*	172N-10307S*	—	—
599-10311S*	3/4 (20)	25 (22)		171N-10311S*	172N-10311S*	—	—
599-10316S*	1 (25)	63 (54)		—	—	171P-10316S*	172P-10316S*
599-10321S*	1-/14 (32)	100 (90)		—	—	171P-10321S*	172P-10321S*
599-10326S*	1-1/2 (40)	160 (140)		—	—	171P-10326S*	172P-10326S*
599-10330S*	2 (50)			—	—	171P-10330S*	172P-10330S*

* Denotes a full-port valve without flow characterizer insert.

Typical Specifications

Ball valves shall have female NPT type fittings and shall be 1/2-inch to 2-inch (15 mm to 50 mm) line and ball sizes. The valves shall have a forged brass body; chrome-plated brass ball with brass stem or stainless steel ball and stem; and EPDM O-ring seals. Valves shall contain glass-filled PTFE ball valve seals or integral seals and flow characterizers to provide an equal percentage control characteristic where required. Ball valves shall utilize a 90-degree rotation for control. They shall provide automated flow control of hot or chilled water and up to 50% water-glycol solution for HVAC control applications.

Technical Data

Pressure Rating	600 WOG/ANSI 250	**Ball Seals**	Glass-filled PTFE with EPDM O-rings
Media Temperature	35°F to 250°F (2°C to 120°C)	**End Connections**	Female NPT
Controlled Medium	Water, 50% water-glycol solution	**Stem**	Brass or stainless steel
Body	Brass: ASTM B283, C37700	**Stem Seals**	EPDM O-rings
Ball	Chrome-plated brass or Stainless steel	**Angle of Rotation**	0° to 90°
Flow Characterizer	Glass-filled PTFE		

Table 12. Full-Port (No Flow Characterizer) Ball Valve Product Numbers and Flow Coefficients.

Valve Product Number	Valve Line Size in Inches (mm)	Effective (Installed) Cv (Kvs)										
		Supply Line Size in Inches (mm)										
		1/2 (13)	3/4 (20)	1 (25)	1-1/4 (32)	1-1/2 (38)	2 (51)	2-1/2 (63)	3 (76)	4 (102)	5 (127)	6 (152)
599-10307 or 599-10307S	1/2 (15)	**10.00 (8.62)**	**6.94 (5.93)**	**6.19 (5.29)**	—	—	—	—	—	—	—	—
599-10311 or 599-10311S	3/4 (20)	—	**25.00 (21.55)**	**18.66 (15.95)**	**15.35 (13.12)**	—	—	—	—	—	—	—
599-10316 or 599-10316S	1 (25)	—	—	**63.00 (54.31)**	**39.78 (34.00)**	**33.56 (28.69)**	—	—	—	—	—	—
599-10321 or 599-10321S	1-1/4 (32)	—	—	—	**100.00 (86.21)**	**69.19 (59.13)**	**51.45 (43.98)**	—	—	—	—	—
599-10324 or 599-10324S	1-1/2 (40)	—	—	—	—	**63.00 (54.31)**	**55.34 (47.30)**	**51.00 (43.59)**	—	—	—	—
599-10326 or 599-10326S		—	—	—	—	**160.00 (137.93)**	**93.80 (80.17)**	**76.34 (65.25)**	—	—	—	—
599-10329 or 599-10329S	2 (50)	—	—	—	—	—	**100.00 (86.21)**	**94.30 (80.60)**	**86.12 (73.61)**	—	—	—

= Valve may be oversized. = Optimal valve size. = Valve may be undersized

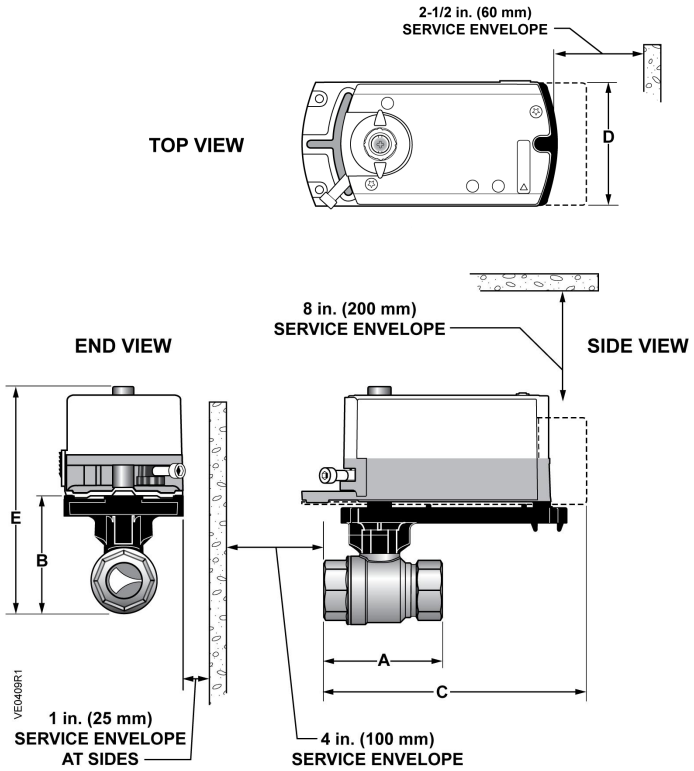

Figure 1. Two-Way Ball Valve and Low Profile Bracket with Actuator Dimensions in Inches (Millimeters).

Line Size Inches (mm)	Cv Range	A Length	B Height	C Length Actuator Codes			D Width	E Height	Valve and Bracket Weight lbs (kg)
				GDE		GQD			
				171A-D	173A-D	171H, J, K, L, N			
1/2 (15)	0.4 to 10	2-7/16 (61)	2-1/4 (57)	5-1/4 (133)	5-3/4 (146)	5-1/4 (133)	2-3/4 (70)	4-13/16 (123)	1 (0.45)
3/4 (20)	6.3 to 25	2-3/4 (70)	2-5/8 67)	5-3/8 (136)	6 (153)	5-3/8 (136)		5-1/4 (133)	1.3 (0.60)

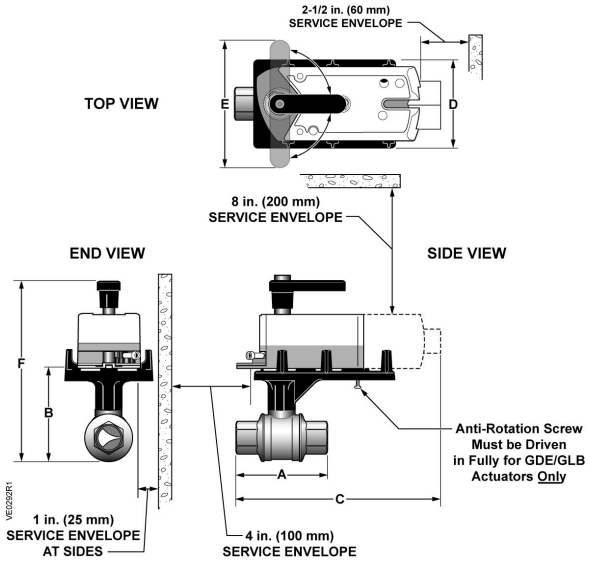

Figure 2. 2-Way Ball Valves.

- All dimensions are in inches (mm).
- Dimension "D", Depth, is 3.7 inches (94.5) "E", Handle, is 5.3 inches (135.9).
- Dimension weights are in pounds (kg).

Table 13. Two-Way Ball Valve and Bracket with Actuator Dimensions in Inches (Millimeters).

Line Size Inch (mm)	Cv Range	A Length	C Length * Actuator Codes 171A-D, 173A-D GDE/GLB	C Length * Actuator Codes 171H,J,K GQD	C Length* Actuator Codes 171E,F 172E,F Fail Safe GMA	F Height	Valve and Bracket Weight lbs (kg)
1 (25)	10	3 (77)	6-11/16 (170)	—	8 (203)	8 (203)	1.6 (0.73)
	16, 40, 63	3-1/4 (82)		—	8-3/8 (213)	8-5/16 (212)	1.8 (0.82)
	25	3-7/8 (98)	7 (178)	—	8-11/16 (221)	8-13/16 (223)	
1-1/4 (32)	16	3-3/8(86)	6-11/16 (170)	—	8-7/16 (214)	8-3/8 (213)	2.0 (0.91)
	25 to 100	3-11/16 (94)	6-15/16 (176)	—	8-11/16 (221)	8-13/16 (223)	2.5 (1.1)
1-1/2 (40)	25, 63	3-5/8 (92)		—	8-7/16 (214)	8-13/16 (223)	1.8 (0.82)
	40, 100, 160	3-15/16 (100)	7-1/16 (180)	—	8-3/4 (223)	9-1/4 (235)	3.3 (1.50)
2 (50)	40, 100	4 (102)		—		9-3/8 (238)	3.1 (1.41)
	63	4-5/8 (118)	7-1/2 (190)	—	9-1/8 (223)	10-1/16 (255)	5.25 (2.38)
	160			—			5.3 (2.40)

*Dimension C is the maximum length, measured from actuator, end fitting, or mounting plate, whichever extends the furthest.

Information in this publication is based on current specifications. The company reserves the right to make changes in specifications and models as design improvements are introduced. OpenAir is a trademark of Siemens Schiewz AG. Product or company names mentioned herein may be the trademarks of their respective owners. © 2016 Siemens Industry, Inc.